HI-SPEED QUICK TRANSIT
IDEAL FOR COMMERCIAL AND INDUSTRIAL NEEDS

HYKE HS

SOLEMYO | OPERA | BLUEBUS | 24V | 230V

For hi-speed automation of swing gates with leaves up to 3 m or 270 kg, ideal for residential applications even with large columns.

24 Vdc electromechanical gear motor with articulated arm, surface mounted, with magnetic encoder.

Ideal for intensive use and quick manoeuvres:
90° opening in about 10 seconds.

Ultra-powerful and reliable: thanks to the torque of 500 Nm and encoder technology, for millimetric precision and reliability.

Safe movement with dual technology obstacle detection.

Sturdy
thanks to the housing in aluminium with polyester paint finish, resistant to atmospheric agents.

Two irreversible 24 Vdc versions with limit switches on opening and closing: with built-in control unit (HK7024) and without control unit (HK7224).

Practical and quick installation: the articulated arm is adjustable in length for maximum flexibility.

Simple and precise limit switch adjustment: mechanical stops and micrometric adjustment screws.

No black out: with the optional batteries (PS124) housed inside the gear motor.

Built-in control unit (HK7024):
- simple programming via a single key;
- self-learning of opening and closing limit positions;
- automatic fault diagnostics;
- pause time programming;
- pedestrian pass door;
- deceleration on opening and closing;
- obstacle detection with dual technology;
- provision for connection of latest generation sensitive edges.

ADJUSTABLE
ANTI-CRUSHING ARM

CODE	DESCRIPTION	PACK/PALLET
HK7024HS	IRREVERSIBLE 24 Vdc, FAST, WITH MAGNETIC ENCODER, COMPLETE WITH ARTICULATED ARM AND BUILT-IN CONTROL UNIT	12
HK7224HS	IRREVERSIBLE 24 Vdc, FAST, COMPLETE WITH ARTICULATED ARM WITHOUT CONTROL UNIT	12

TECHNICAL SPECIFICATIONS

CODE	HK7024HS	HK7224HS
ELECTRICAL DATA		
POWER SUPPLY (Vac 50/60HZ)	230	-
POWER SUPPLY (Vdc)	-	24
ABSORPTION (A)	1.5	6
POWER (W)	300	140
PERFORMANCE DATA		
SPEED (rpm)	>> 2 <<	
TORQUE (Nm)	500	
WORK CYCLE (CYCLES/HOUR)	40	
DIMENSIONAL AND GENERAL DATA		
PROTECTION LEVEL (IP)	54	
WORKING TEMP. (°C MIN/MAX)	-20 ÷ +50	
DIMENSIONS (mm)	290x210x320 h	
WEIGHT (kg)	10.5	9.5

UTILISATION LIMITS

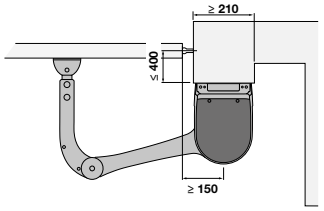

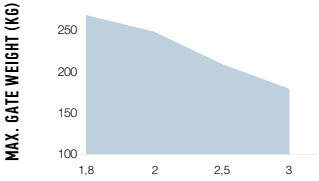

The shape, the height of the gateand the weather conditions can considerably reduce the values shown in the graph to the side.

DIMENSIONS

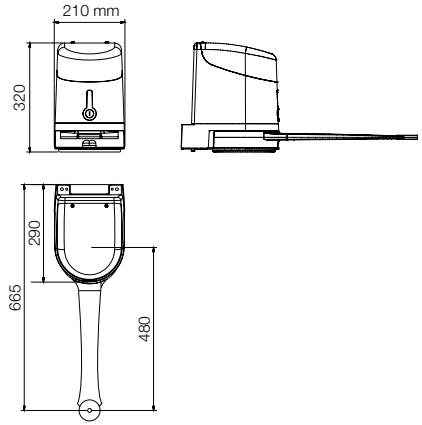

Nice recommends customers order products in pallets in order to facilitate storage and delivery, and ensure packs are uniform. The number of packs per single pallet has been specified for this reason. Approximate draft.