BL 15

Datasheet

Rev. 10 • Update 09/2022

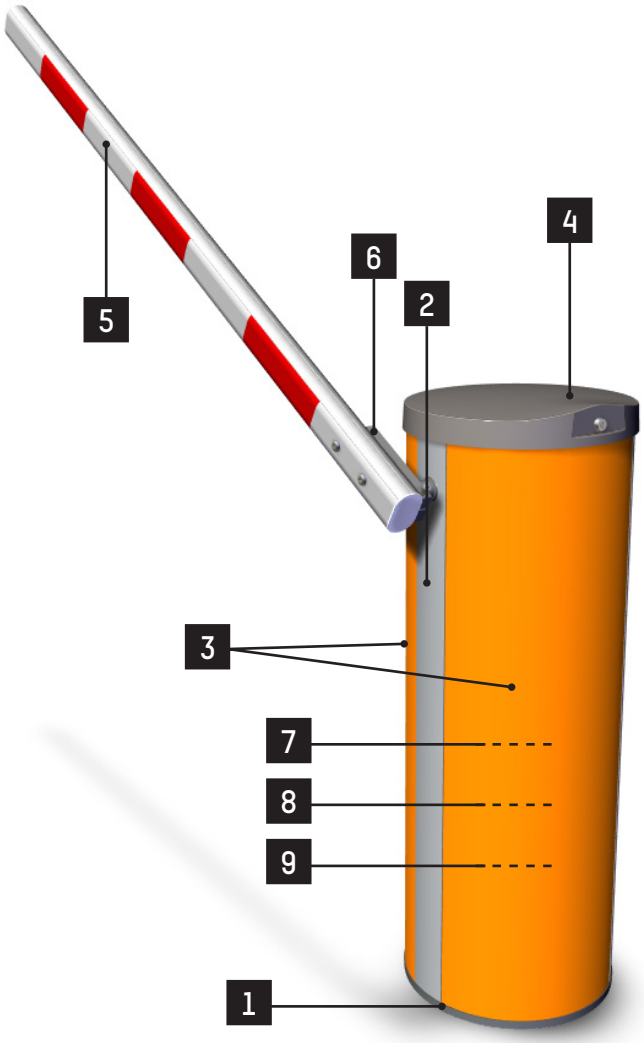

Combining speed, ease of use and reliability, the **BL 15** is the rising barrier designed for the access control of public environment.

Its attractive price and manufacturing quality make it an efficient and economical product.

STANDARD EQUIPEMENT

1. **Aluminum cast sole plate**.
2. **Anodized aluminum frame**.
3. **Lacquered aluminum housing panels** (selection of 5 colors). «**Qualicoat**» lacquering providing an excellent protection against corrosion.
4. **Aluminum cast hood**, locked by key.
5. **Oval aluminum arm** of section 80 x 54 mm, **lacquered white** (RAL 9010) **with red reflective strips**.
6. **Drive shaft**, diameter 30 mm, fitted on a geared motor and a lifetime lubricated bearing.
7. **Automatic opening in case of power failure** (AVR).
8. **Electromechanical assembly** including:
   - **Reversible three-phase asynchronous gear motor**, ensuring protection of the mechanism in case of forced lifting of the arm due to fraudulent action. Maintaining the arm in its 2 extreme positions (open and closed), is achieved by the frequency converter.
   - **Frequency converter** ensuring progressive accelerations and dampened decelerations, for movement without vibrations, reversal of direction without jolts (reopening) and increased protection of the mechanism.
   - **Electronic limitation of the electromechanical assembly torque allowing** immediate stopping of the arm during closing in case of an obstacle
   - **Analog position sensor** indicating the high and low positions and allowing control of the gear motor.
   - **Balancing of the arm by means of a compensating spring**, according to the weight of the arm.
9. Varnished **electronic control board** offering inputs, outputs and relays adjustable:
   - Adjustable opening and closing speed.
   - Arm position status (open or closed).
   - Swing-off arm sensor.
   - Technical fault information report.
   - Human/Machine interface to change or adjust the electronic control board parameters.
   - HTML interface via Ethernet connector.
   - Socket for presence detector (2 loops).

STANDARD RAL COLORS

RAL 2000 (*) Orange | RAL 3020 Traffic red | RAL 7016 Anthracite grey | RAL 9010 Traffic white

(*) Standard color. All other colors must be specified when ordering.

Note: These RAL references are available for free.

STANDARD TECHNICAL CHARACTERISTICS

Power supply	Single phased 230 VAC - 50/60 Hz + ground. [1]
Consumption [2]	During motion: 150W max. At rest: 44W [2]
Motor	Three-phased 230V/90W
Useful arm length (L)	From 2 to 4m, increments of 0,5m
Minimum opening/closing time	Adjustable between 1,2 and 4,7 sec. according to 3 profiles: 1. Standard [3] 2. Intermediate [4] 3. Maximum [5]
Ambient operating temperature	Between -10 and +60°C.
Relative ambient humidity	95% max, without condensation.
MCBF (Mean Cycle Between Failure)	**2,500,000** cycles, in compliance with recommended maintenance
Net weight	50 kg (without arm) Arm: from 1,6 to 3,2 kg max.
IP rating	IP55
CE	Conform to European standards.

(1) Do not connect to an isolated ground network or a high impedance earthed industrial networ.
(2) Depending of options.
(3) Standard speed - Impact force in accordance with EN 12453.
(4) Intermediate speed - Impact force in accordance with EN 12453 by adding a foam protection under the arm..
(5) Maximum speed - The installer must ensure that the installation complies with the standard, e.g. with dead man's operation.

CONFIGURATION

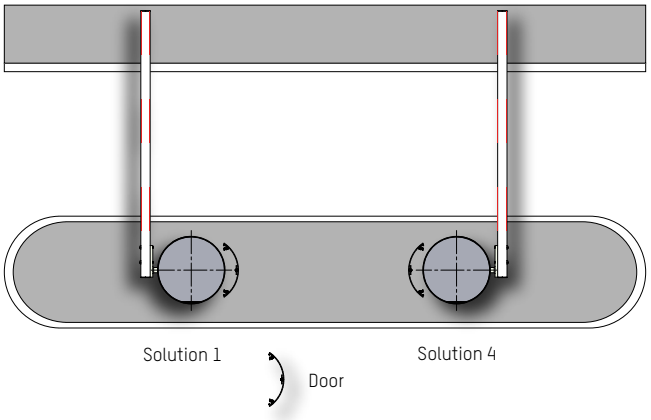

WORK TO BE PROVIDED BY THE CUSTOMER

- Adapted ground fastening.
- Power supply.
- Wiring towards eventual external peripherals.

Note: Follow the installation plan.

OPTIONAL

ARMS

- Articulated oval arm.
- Back oval arm swing-off + swinged-off arm detection.
- Foam protection under the aluminium arm.
- Rubber protection profile.
- Electromechanical holding arm position in case of power failure (SR).

TIP SUPPORT

- Height adjustable tip support.
- Electromagnetic tip support - Ø80mm or Ø84mm arm.
- Electrolocked tip support

SECURITY & SAFETY

- Opening protection of both cover & door - Information by a dry contact.

CONTROL & COMMAND

- Push button box - 2 buttons (opening / closing).
- Push button box - 2 push buttons + 1 switch (3 positions). [6]
- Key switch on the housing. [7]
- Radio transmitter - 2 channels.
- Radio receiver - 2 channels + antenna.
- Radio transmitter - 4 channels.
- Radio receiver - 4 channels + antenna.
- Inductive loop for vehicle detection.
- Presence sensor on rail - Single channel
- Presence sensor on rail - Double channel
- Photo-electric cell - Transmitter / Receiver.
- Photo-electric cell - Reflex.
- Support post for photo-electric cell (H = 0.7m) .
- Cell mounting - Transmitter + Receiver or Reflex.
- Ultrasonic detector with protective cover included. [8]
- Human Machine Interface colour screen with keypad for AS1620 logic board (AS1621).
- Ethernet interface (AS1622).
- SD memory card for AS1620 Ethernet board - Industrial grade.
- Input / output (I/O) extention card for AS1620 logic board (AS1623).
- PLA1301 - Electronic board for input / output + Presence sensor connector.
- Totaling counter (number of vehicle operations).
- Totaling counter with resetting.
- Counter / Count down (parking : in - out = total).
- Laser sensor – On separate post.
- Laser sensor - fixed on barrier housing .
- Remote control for laser sensor.
- Reference point for laser sensor fixed on post.
- Reference point for laser sensor fixed on tip support.
- Integration kit for ANPR camera Survision Nanopak with 24V DC power supply (camera not included) Assembly carried out by AS if the camera is supplied by the customer.

SIGNALISATION

- Function pictogram - Integrated in the cover (Red ⇨ closed / Green ⇨ open).
- LEDs on arm - Per pair (Flashing lights (red) when closed).
- LED flashing light on the covert. [9]
- LED flashing light with grid on the top cover. [9]
- Traffic lights (Ø 100mm) - Red/green LEDs - Supply.
- Traffic lights (Ø 200mm) - Red/green LEDs - Supply.
- Traffic lights (Ø 200mm) - Orange LEDs - Supply.
- Support post (H = 2.7m) for traffic lights - Supply.
- Wall bracket for traffic lights (Ø 100mm).
- Acoustic alarm 100dB (internal mounting) during the barrier closing movement.
- Aluminium composite traffic sign (Ø 300mm).

AESTHETIC

- Painted in another RAL colour.
- Customer logo.
- Raised base. [10]

POWER SUPPLY

- Power supply 120V - 50/60Hz.

ENVIRONMENT

- Thermostatic heating - Heating for operation until -45°C.

Note: For restrictions on options, please contact us.

(6) Opening/Closing + switch for Automatic or Manual mode.

(7) Automatic / Locked open / Locked closed.

(8) Not considered as a safety device if used alone.

(9) Flashing during opening/closing movement and in open position - Off in closed position.

(10) 30mm-thick in black plastics for BL1X or 60mm-thick in RAL 9005 painted steel for BL2X.

BL 15
Datasheet
Rev. 10
Update 09/2022

STANDARD DIMENSIONS (mm)

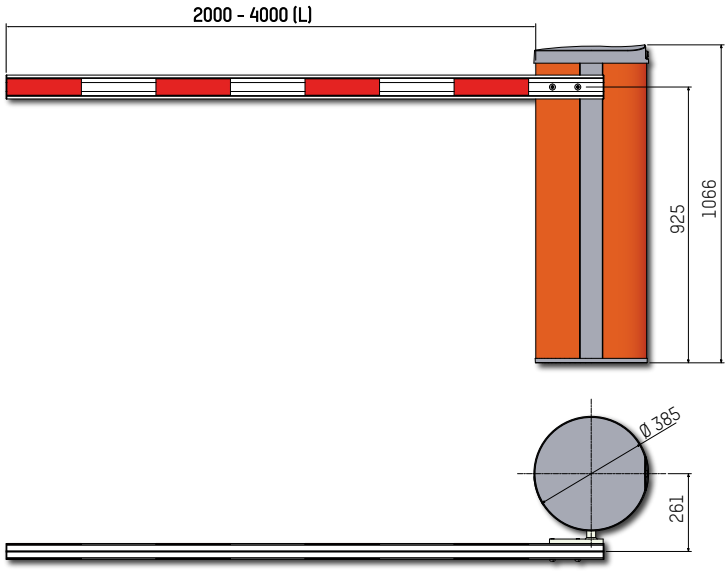

STANDARD DIMENSIONS WITH ARTICULATED OVAL ARM (mm)

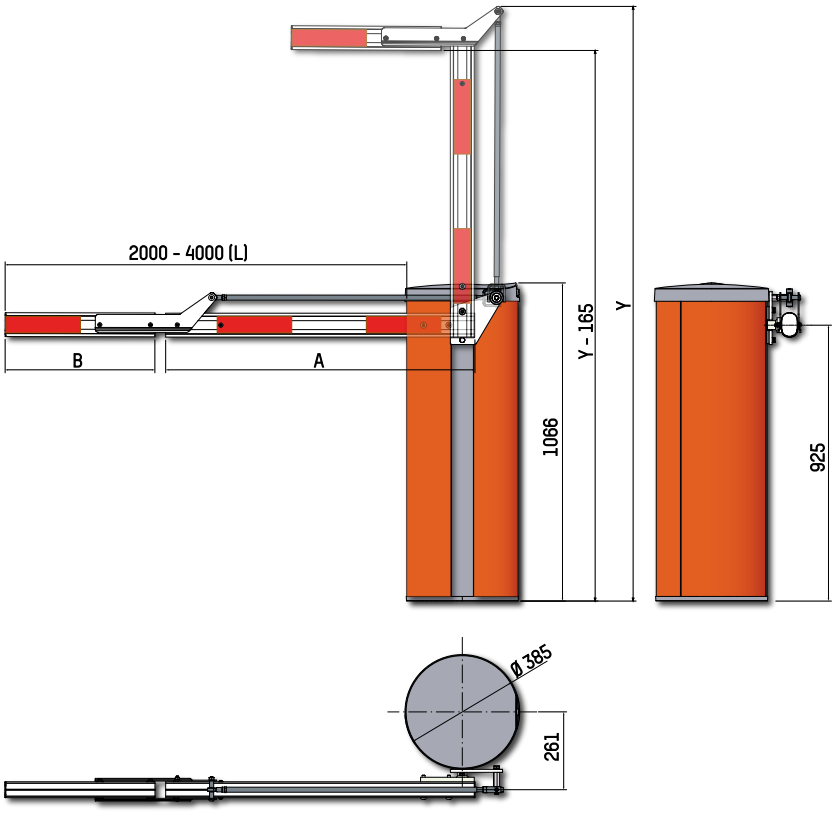

		B			
USEFUL LENGTH (L)	2000	1327	1127	927	727
	2500	1827	1627	1427	1227
	3000	2327	2127	1927	1727
	3500	2827	2627	2427	2227
	4000	3327	3127	2927	2727
DRIVING* (A)		839	1039	1239	1439
Y		1800	2000	2200	2400

* + 46 mm for swing-off arm

Headquarters
Avenue Mercator, 5
1300 Wavre - Belgium

cs.international@automatic-systems.com

+32.(0)10.23.02.11

www.automatic-systems.com

With a constant view of adopting the latest technological developments, Automatic Systems reserves the right to amend the information above, at any time. Non-contractual document.