# ANTI-TERROR HIGH SECURITY ROAD BLOCKER
## ATRB-3110 Series

**Patent No 2012/13979**

Road blocker is the most commonly-used system in the areas such as military facilities, government buildings, embassies, production facilities, oil refineries, hotels, airports and stadiums where the entries-exits must be made in a controlled and safe manner against any vehicle attacks.
The system's case is designed as resistant to hits by vehicles , and all relevant components of the systems are strengthened against any attacks. Arma Kontrol Blocker Systems work uninterruptedly even at the highest-density places thanks to the hydraulic operation system. This system is synchronized with the rising bollard and other safety systems, and keeps the defense at the maximum level in case of possible attacks, and thus ensures the secure entrance of the vehicles into relevant areas.

## Technical Specifications

| | |
|---|---|
| Road Blocker Height | 1100mm |
| Road Blocker Width Options | 2000mm to 6000mm |
| Wall Thickness | Side blades 20 mm, Top sheet 10 mm, Front sheet 4 mm |
| Material of the Moving Part | S275JR Steel |
| Finish | Epoxy Paint |
| Drive Movement | Hydraulic Driven |
| Motor Power | 3-15 kw |
| Power Supply | 3 Phase 380 V (±10) AC, 50/60 HZ |
| Rising / Falling Time | 6-9 sec. |
| Axle Load | 30 Tons |
| Impact Resistant (without deformation) | 2.988 KJ |
| Control Panel | PLC (Programmable Logic Controller) |
| Safety Support | Loop Detector |
| Compatibility with Access Control Systems | License Plate Recognition, Card Reader, Finger Print etc. |
| Operating Temperature | -25°C - +50°C |
| Protection Class | IP 67 |

## Optional Specifications

| | |
|---|---|
| Manual Lifting | Hand Pump |
| Operating Temperature | -40°C to +75°C |
| Hydraulic System Heating – Cooling | Available |
| Warning Equipment | Flasher - Traffic Light - Buzzer |
| EFO (Emergency Fast Operation) | 1.5 – 2 sec. |
| System Security Support | Safety Photocell |
| UPS (Back-up Power System) | In Case of Power Failure |

## Images

## Technical Drawing

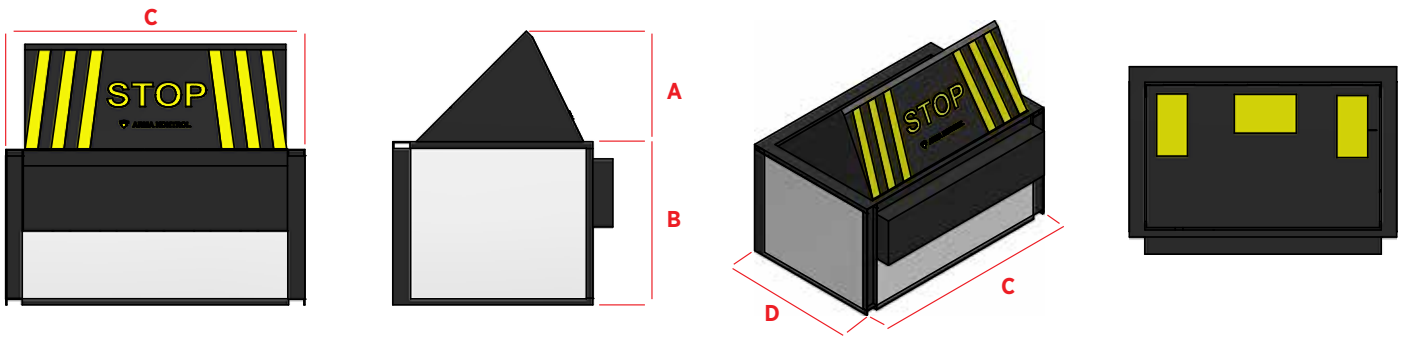


| A (mm) | B (mm) | C (mm) | D (mm) |
|---|---|---|---|
| 1100 | 1800 | 2000 to 6000 | 2265 |



*We Are Here for Your Safety!*