ANTI-TERROR HIGH SECURITY ROAD BLOCKER
ATRB-3110 Series

Patent No 2012/13979

Road blocker is the most commonly-used system in the areas such as military facilities, government buildings, embassies, production facilities, oil refineries, hotels, airports and stadiums where the entries-exits must be made in a controlled and safe manner against any vehicle attacks.
The system's case is designed as resistant to hits by vehicles , and all relevant components of the systems are strengthened against any attacks. Arma Kontrol Blocker Systems work uninterruptedly even at the highest-density places thanks to the hydraulic operation system. This system is synchronized with the rising bollard and other safety systems, and keeps the defense at the maximum level in case of possible attacks, and thus ensures the secure entrance of the vehicles into relevant areas.

Technical Specifications

Road Blocker Height	1100mm
Road Blocker Width Options	2000mm to 6000mm
Wall Thickness	Side blades 20 mm, Top sheet 10 mm, Front sheet 4 mm
Material of the Moving Part	S275JR Steel
Finish	Epoxy Paint
Drive Movement	Hydraulic Driven
Motor Power	3-15 kw
Power Supply	3 Phase 380 V (±10) AC, 50/60 HZ
Rising / Falling Time	6-9 sec.
Axle Load	30 Tons
Impact Resistant (without deformation)	2.988 KJ
Control Panel	PLC (Programmable Logic Controller)
Safety Support	Loop Detector
Compatibility with Access Control Systems	License Plate Recognition, Card Reader, Finger Print etc.
Operating Temperature	-25°C - +50°C
Protection Class	IP 67

Optional Specifications

Manual Lifting	Hand Pump
Operating Temperature	-40°C to +75°C
Hydraulic System Heating – Cooling	Available
Warning Equipment	Flasher - Traffic Light - Buzzer
EFO (Emergency Fast Operation)	1.5 – 2 sec.
System Security Support	Safety Photocell
UPS (Back-up Power System)	In Case of Power Failure

Images

Technical Drawing

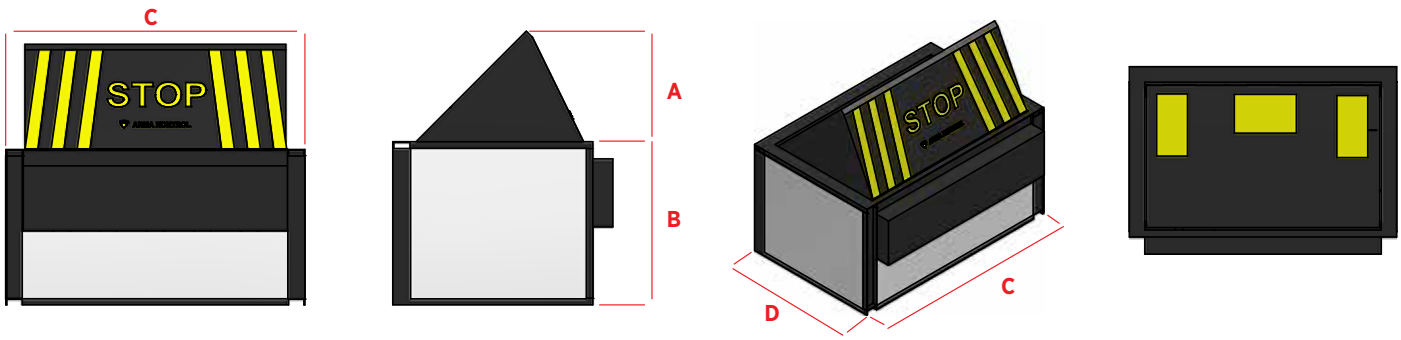

A (mm)	B (mm)	C (mm)	D (mm)
1100	1800	2000 to 6000	2265

We Are Here for Your Safety!

ANTI-TERROR HIGH SECURITY ROAD BLOCKER
ATRB-700 Series

Road blocker is the most commonly used system in the areas such as military facilities, government buildings, embassies, production facilities, oil refineries, hotels, airports and stadiums where the entries-exits must be made in a controlled and safe manner against any vehicle attacks.
The system's case is designed as resistant to hits by vehicles, and all relevant components of the systems are strengthened against any attacks. Arma Kontrol Blocker Systems work uninterruptedly even at the highest-density places thanks to the hydraulic operation system. This system is synchronized with the rising bollard and other safety systems, and keeps the defense at the maximum level in case of possible attacks, and thus ensures the secure entrance of the vehicles into relevant areas.

Technical Specifications

Road Blocker Height	700mm
Road Blocker Width Options	2000mm to 6000mm
Wall Thickness	Side blades 10 mm, Top sheet 10 mm, Front sheet 4 mm
Material of the Moving Part	S275JR Steel
Finish	Epoxy Paint
Drive Movement	Hydraulic Driven
Motor Power	3-10 kw
Power Supply	3 Phase 380 V (±10) AC, 50/60 HZ
Rising / Falling Time	6-8 sec.
Axle Load	30 Tons
Impact Resistant (without deformation)	700 KJ
Control Panel	PLC (Programmable Logic Controller)
Safety Support	Loop Detector
Compatibility with Access Control Systems	License Plate Recognition, Card Reader, Finger Print
Operating Temperature	-25˚C - +50˚C
Protection Class	IP 67

Optional Specifications

Manual Lifting	Hand Pump
Operating Temperature	-40˚C to +75˚C
Hydraulic System Heating – Cooling	Available
Warning Equipment	Flasher - Traffic Light - Buzzer
EFO (Emergency Fast Operation)	1.5 – 2 sec.
System Security Support	Safety Photocell
UPS (Back-up Power System)	In Case of Power Failure

Images

Technical Drawing

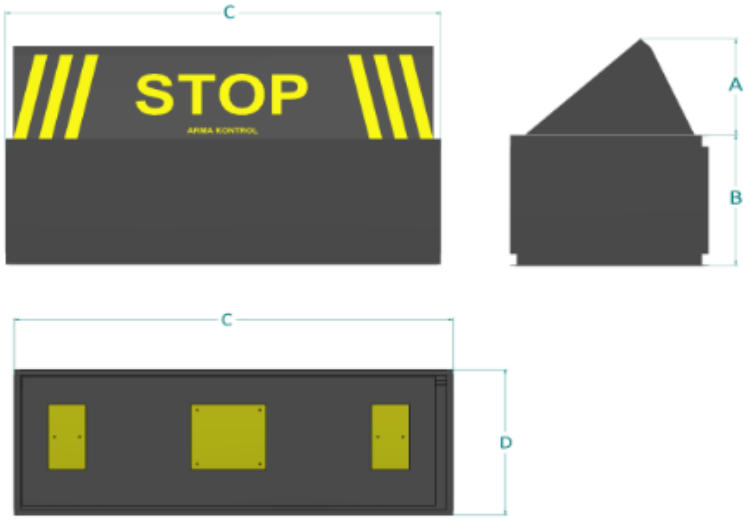

A : 700 mm
B : 1000 mm
C: 3000 mm
D : 1110 mm

ANTI-TERROR HIGH SECURITY ROAD BLOCKER
7.500 KG - 48 km/h

Arma Kontrol High Security Road Blocker is specially designed to prevent passage of any unauthorized vehicles with high security system and it is strengthened against attacks.

Anti-Terror Road Blocker, 7.500 kg (7.5 Tons) truck crashed at speed of 48 Km/h in a crash test in The Laboratory, then stopped the truck and continued to function without any problems afterwards. Therefore, we are internationally certified.

Standards : PAS68 2013- N3 7500-48
IWA 14-1:2013 N3C 7200-48